PHF FX40-25X50

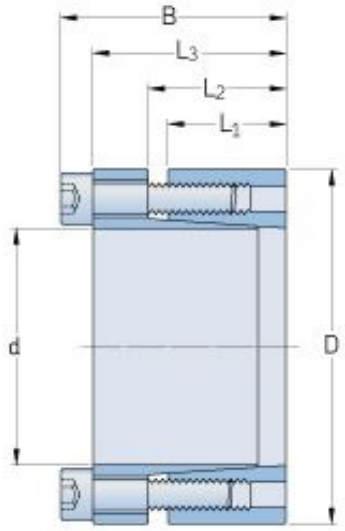

Bushing no.	FX40
d (mm)	25
d (in)	0.98
D (mm)	50
d_w (mm)	-
L (mm)	-
L_1 (mm)	26
L_2 (mm)	29
L_3 (mm)	42
B (mm)	48
D_1 (mm)	-
d_1 (mm)	-
e (mm)	-
F_t Transmissible axial force (kN)	54
M_t Transmissible torque (Nm)	680
P_w Shaft surface pressure (N/mm²)	200
P_n Hub surface pressure (N/mm²)	100
Clamp screws Qty	6
Clamp screws size	M6
Clamp screws nut	-
M_s Screw	17

® SKF is a registered trademark of the SKF Group
© SKF Group 2012
The contents of this publication are the copyright of the publisher and may not be reproduced (even extracts) unless prior written permission is granted. Every care has been taken to ensure the accuracy of the information contained in this publication but no liability can be accepted for any loss or damage whether direct, indirect or consequential arising out of the use of the information contained herein.

tightening torque (Nm)	
Weight (kg)	0.4

® SKF is a registered trademark of the SKF Group
© SKF Group 2012
The contents of this publication are the copyright of the publisher and may not be reproduced (even extracts) unless prior written permission is granted. Every care has been taken to ensure the accuracy of the information contained in this publication but no liability can be accepted for any loss or damage whether direct, indirect or consequential arising out of the use of the information contained herein.